Design Sheet - Ancon SPA System

Please provide: contact, project and design details

Contact Details

Contact name .....

Company .....

Address .....

.....

.....

Tel .....

Fax .....

Email .....

Project name and town .....

.....

Typical Application

SPA Frame Cramps Fixed to Steel
with M6 Isolated Set Screws

Debonding Sleeve for use at movement joint

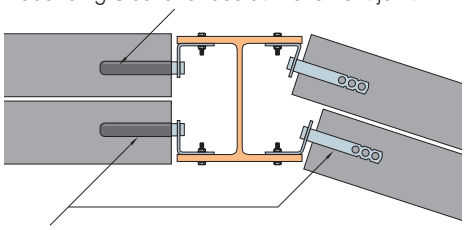

Wall Ties should be positioned centrally
in the masonry leaf.
Use Dimension B to achieve this.

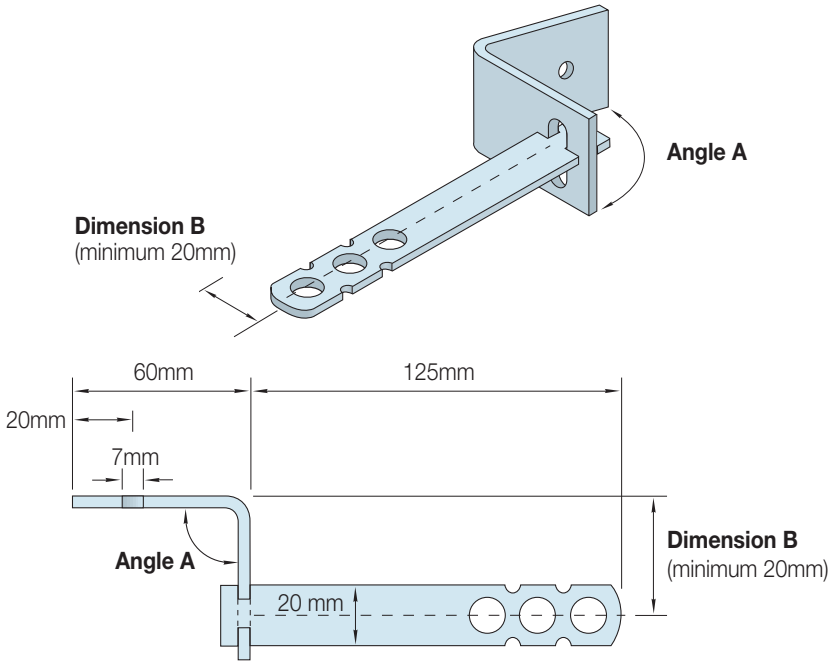

Only Angle A and Dimension B are flexible. Other dimensions are fixed. If other dimensions need to change to suit your application, please contact Leviat's Technical Services Team on 0114 275 5224 for advice.

Your SPA Reference	Debonding Sleeve Yes or No	Angle A	Dimension B	Quantity

Email to tech.ancon.uk@leviat.com
Leviat, President Way, President Park, Sheffield, S4 7UR, UK.
Tel: +44 (0) 114 275 5224, Web: Ancon.co.uk | Leviat.com

Ancon®